AMERICAN WRESTLING ASSOCIATION
AWA

ALL
STAR
WRESTLING

AMERICAN WRESTLING ASSOCIATION
AWA

Wrong Presentation!

Wrestling with

K0JDD - 2026 (v1)

The Amateur Radio Linking Universe

Internet Radio Linking Project

YAESU System Fusion

D-STAR

DMR DIGITAL MOBILE RADIO

ALLSTAR LINK ALLSTARLINK.ORG

EchoLink

Don’t these all do about the same thing?

- Yes, all of them will connect user A to user B across the Internet

  but…

- Some require the use or purchase of expensive repeaters and/or repeater interface hardware
- Some require that you buy a new HT or Mobile/Base radio
- Gateways between these disparate networks are available, but can be complicated to implement and maintain

AI* Generated Estimate of System Sizes

Number of Nodes (2000-2025)

Year	D-STAR	DMR	System Fusion	IRLP	AllStar Link	EchoLink
2000	200	0	0	1,000	0	0
2005	500	0	0	1,500	0	5,000
2010	1,000	10,000	500	2,000	1,000	20,000
2015	1,500	30,000	3,000	2,500	1,500	30,000
2020	1,800	60,000	6,000	2,800	2,000	40,000
2023	1,800	80,000	5,000	2,500	10,000	50,000
2025	2,000	85,000	7,000	3,000	40,000	60,000

**Trust this data only as much as you would trust any other AI generated information*

Focus on

- AllStarLink is a network of Amateur Radio repeaters, remote base stations, and hot spots accessible to each other via the Voice over Internet Protocol. (VoIP)
- The AllStar software runs on a dedicated computer that you host at your home, radio site, or computer center.
- AllStar is based on the open source Asterisk PBX running the app_rpt application which makes it a powerful system capable of controlling one or more radios. It provides linking of these radio "nodes" to other systems of similar construction anywhere in the world using VoIP.
- AllStar is typically deployed on a dedicated computer node that is wired to your repeater or radio device.
- Direct connections to Echolink, other VoIP clients, and VoIP telephone calls are supported.
- Access to DMR, D*Star, System Fusion, and IRLP is available by connecting to specific nodes that provide such a gateway.
- AllStarLink has **46,173 users and 37,8713 nodes** (as of 7/27/2026)

Advantages

- **Flexibility:** AllStar Link allows users to create a wide variety of node configurations, including linking to multiple radios, digital modes, and other networks.
- **Open Source:** The software and protocols are open source, which encourages community contributions and continuous improvement.
- **Cost-Effective:** Operating an AllStar Link node can be done with relatively low-cost hardware, such as a Raspberry Pi, which makes it accessible for many users.
- **Integration:** AllStar Link can easily integrate with other systems like IRLP, Echolink, and DMR, allowing for broader connectivity.
- **High-Quality Audio:** It uses high-quality audio codecs, which can provide better sound quality compared to some other systems.
- **Scalability:** The network can scale easily, accommodating a growing number of nodes without significant infrastructure changes.
- **User-Friendly:** Many users find the setup and operation of AllStar Link to be straightforward, aided by extensive documentation and community support.
- **Advanced Features:** It offers advanced features like remote control of nodes, echo tests, and various access methods, including mobile and web-based interfaces.

Gateways to D*Star, System Fusion, etc…

Repeater

Mobile App

Hotspot

Voip Phone

The Node

An AllStarLink node is a specific point in the AllStar Link network that facilitates communication between users.

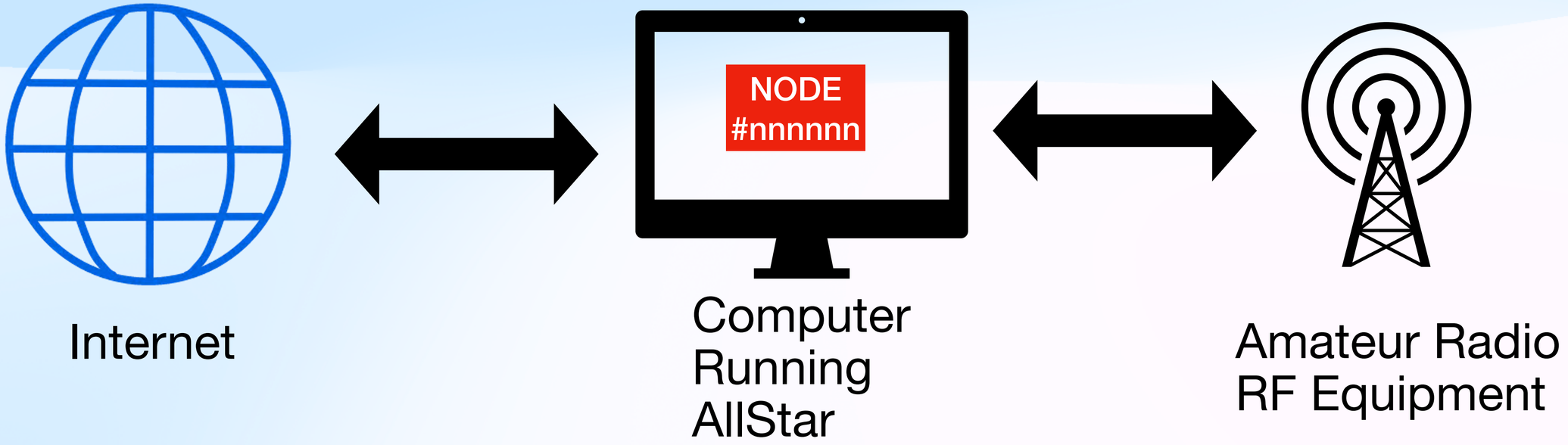

Node Types

- Repeater Nodes (with or without gateway capabilities)
- Hot Spot nodes
- Mobile APP nodes
- Hard/Soft VOIP nodes
- Conference Rooms/Hubs

Why a Hot Spot?

- Low barriers to entry - Uses the VHF/UHF radios you already own. You might invest $100-200 in computer and hotspot hardware
- AllStar software suite is Open Source and *Free*
- You can buy commercial hot spot products or DIY kits
  Beware of Chinesium clones that may not meet part 97 requirements for emissions
- Once you are on the network you can connect to *Every Other Node (or even multiple nodes)*

Hot Spot Use Cases

- No local repeater coverage in your area
- Desire to access home area repeater from vacation home
- Subject to HOA/CC&R - e.g. no external antennas allowed
- Portable use in EMComm situations
- Talk to N0UC in Arizona using an HT
- Be *cooler* than the average Ham

About Shari

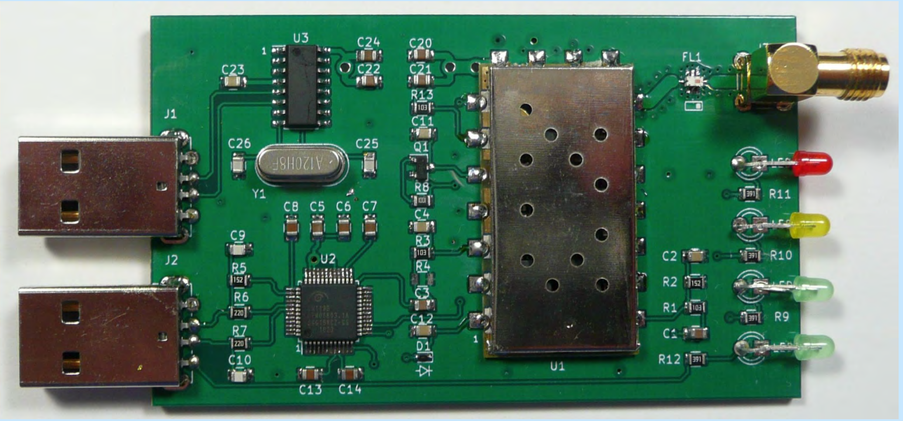

- SHARI = SA818 Ham Allstar Radio Interface
- SHARI-Pi is a single board interface kit for the Raspberry Pi computer that is used to create an RF hotspot which interfaces to AllStarLink. It was developed by N8AR. It produces up to 1 watt RF output.
- The AF IN/OUT, PTT, and COR functions are interfaced to the Rpi using USB. It is based upon the SA818x chip family.

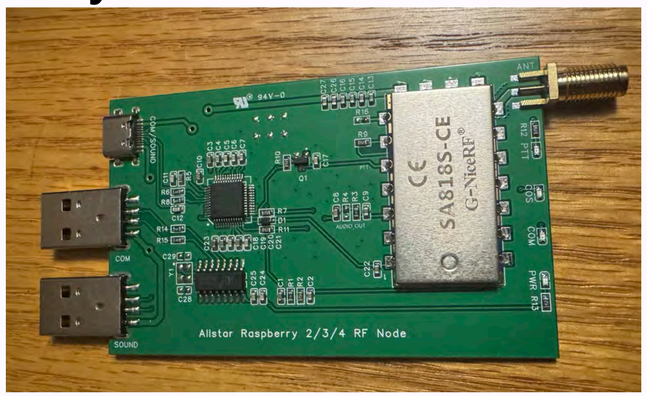

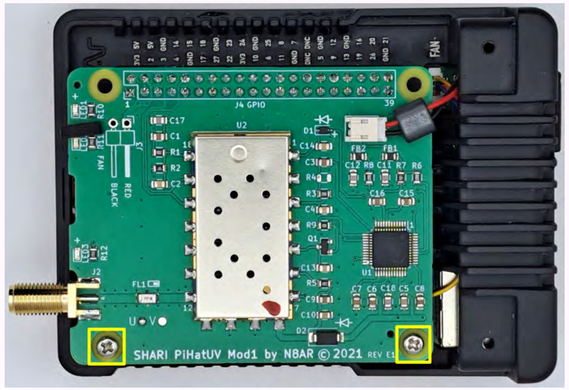

Shari-Pi Hot Spot

Simplified Block Diagram

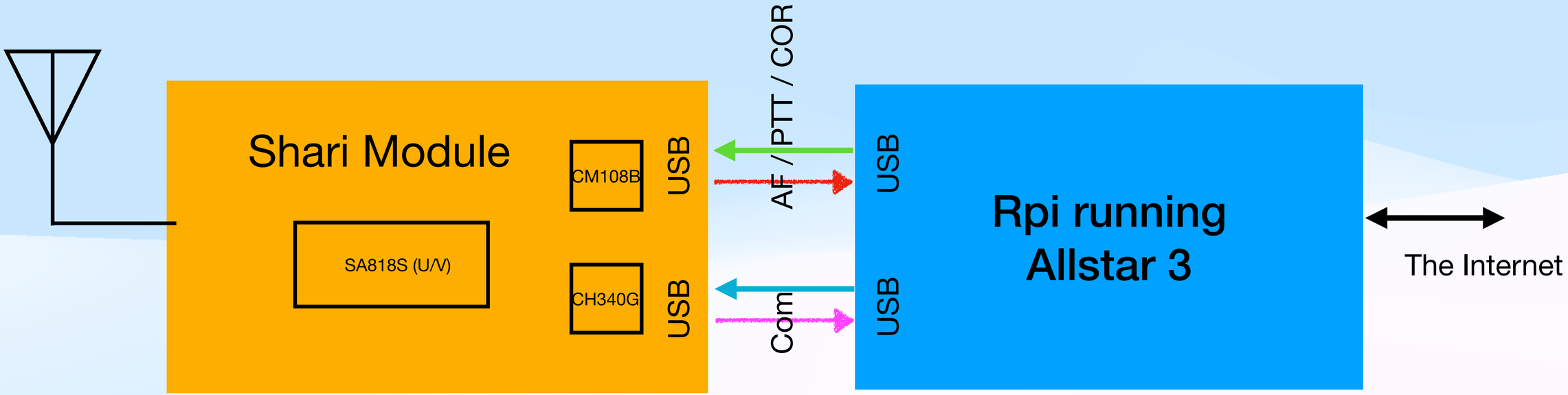

SA818 Overview

- The SA818 is a high-performance, cost-effective, integrated walkie-talkie module Designed and Manufactured by G-NiceRF.
- It is a complete radio transceiver system built into a compact module, allowing users to integrate it into custom hardware for various applications.
- The SA818 has an upgraded version, the SA818S, which adds an LNA (low-noise amplifier) for better reception sensitivity. The newest SA818S-CE now has CE-RED certification.
- Available in VHF and UHF versions

G-NiceRF www.nicerf.com SA818S

4. Internal block diagram

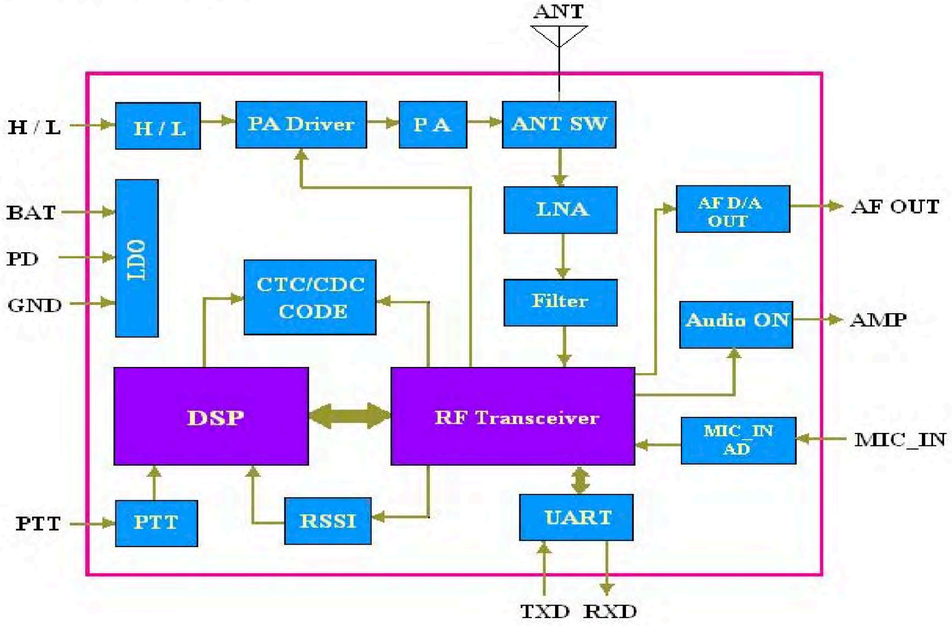

Pop Quiz

- What is a ‘castellated via’ on a PCB?

Pop Quiz

- What is a ‘castellated via’ on a PCB?

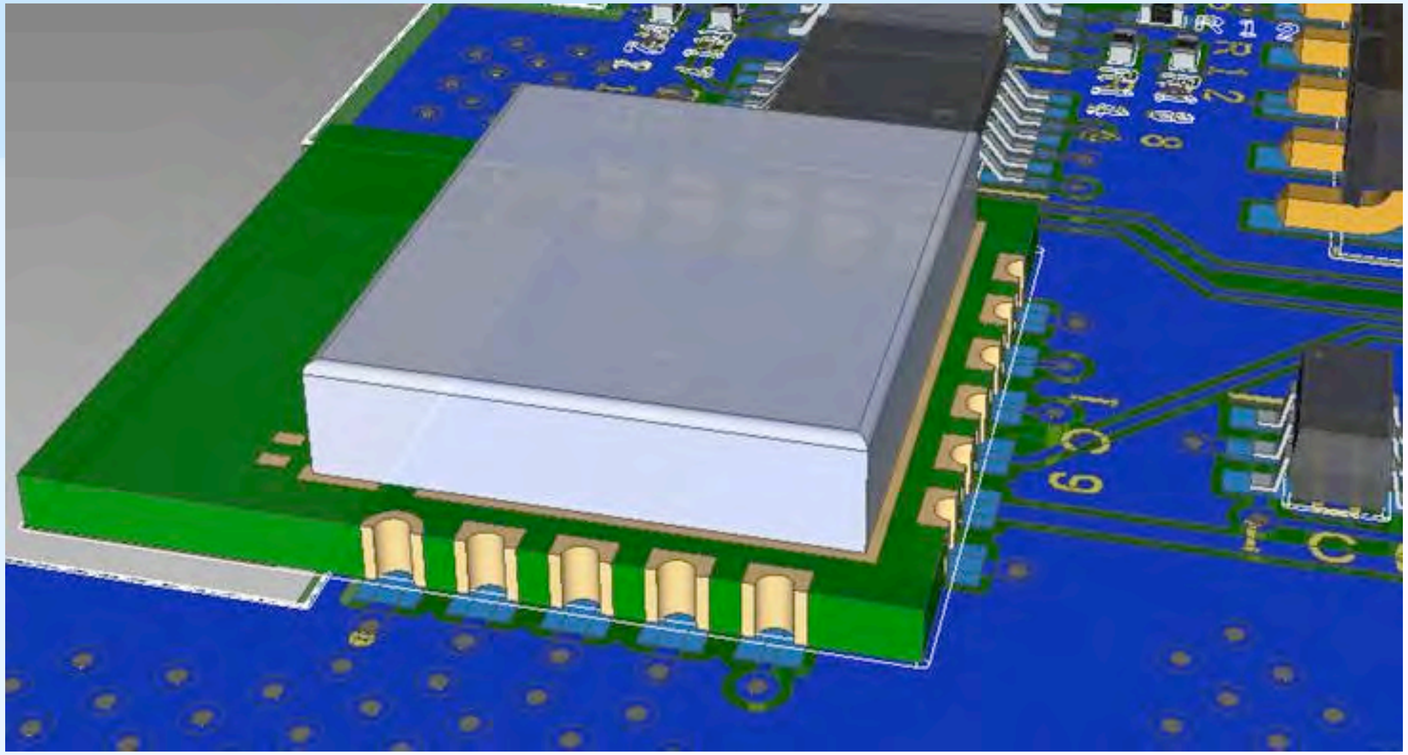

Raspberry Pi Overview

- Raspberry Pi is a low-cost, credit-card-sized computer that can be used for learning, general computing, and building custom projects.

- It's a single-board computer, meaning all its main components are on one circuit board, and it can be used like a desktop computer or integrated into projects that interact with the physical world.

- Key components include a processor, HDMI port, USB ports, and a unique General Purpose Input/Output (GPIO) header for connecting sensors and other devices

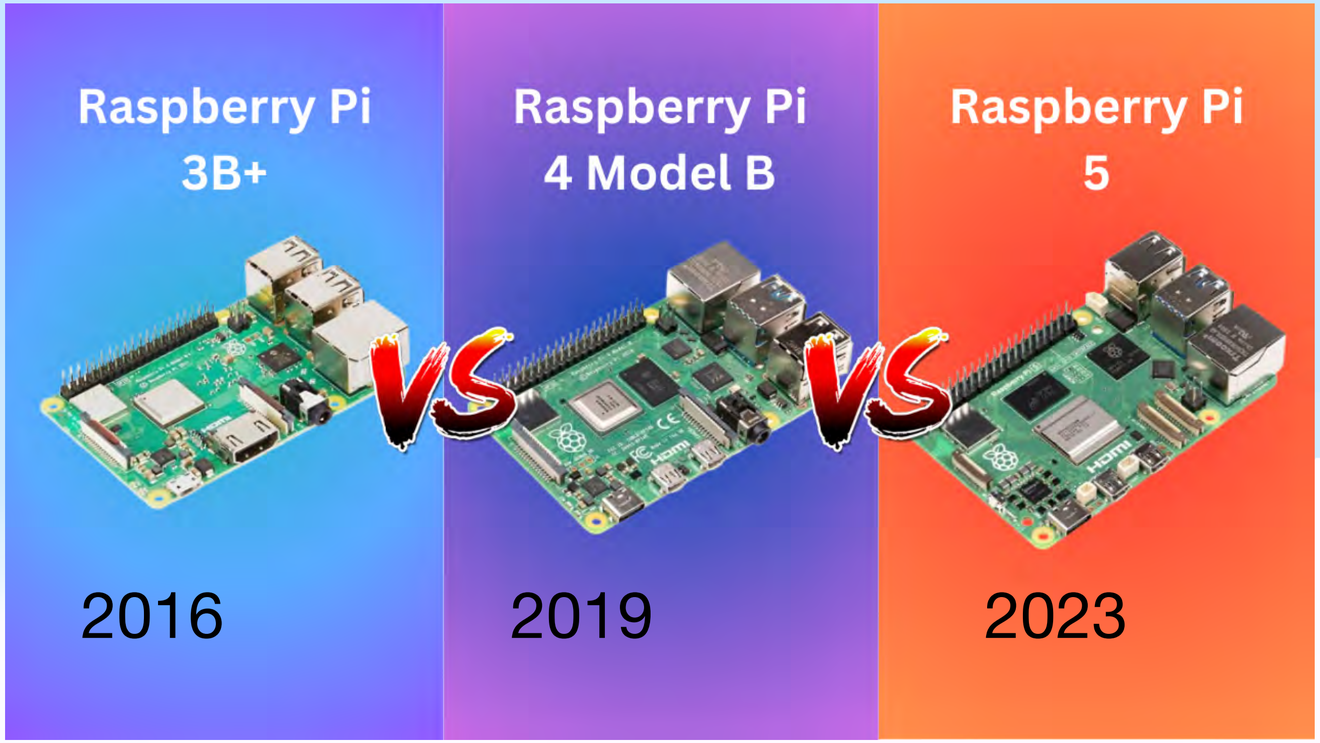

Show and Tell

/

Demo

AllStar Hotspot DTMF commands

(User Configurable - YMMV)

*1nnn = Disconnect specified link
*2nnn = Connect specified link -- monitor only
*3nnn = Connect specified link -- transceive

*70 = System status

*711 = Force ID (local only)
*712 = Give Time of Day (local only)

*721 = Force ID (global)
*722 = Give Time of Day (global)
*723 = Give software Version (global)

AllStar Hotspot DTMF Commands And Useful Nodes

*1nnn = Disconnect specified link
*2nnn = Connect specified link -- monitor only
*3nnn = Connect specified link -- transceive

*70 = System status

*711 = Force ID (local only)
*712 = Give Time of Day (local only)

*721 = Force ID (global)
*722 = Give Time of Day (global)
*723 = Give software Version (global)

Node 2002 = Special diagnostic parrot server used for audio checks, network testing, and checking if your node routing/port-forwarding is reachable

Node 40894 / 55553: Commonly utilized public test echo nodes to check inbound/outbound connectivity and audio levels

W0YC (Gopher Radio Club): Located in Saint Paul on 442.4250 MHz (+ offset, PL 114.8), AllStar Node 639334.

KB0FJB: Located in Minneapolis on 443.8000 MHz (+ offset, PL 114.8), AllStar Node 50639.

Twin Cities FM Club / N0BVE systems: Linked via Node 429820, frequently tied into local swap nets and regional reflectors.

AllMon3: The AllStarLink V3 GUI Interface

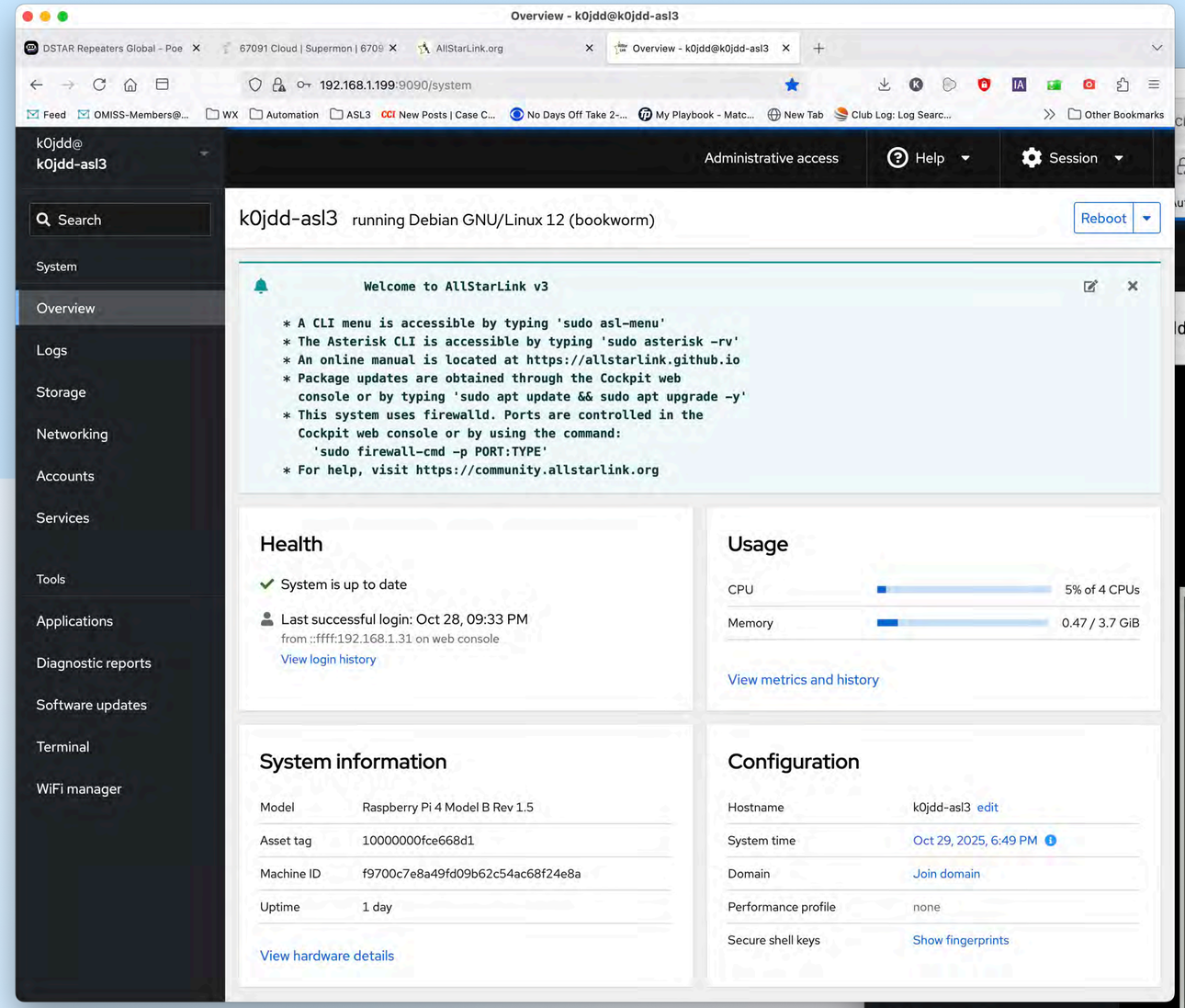

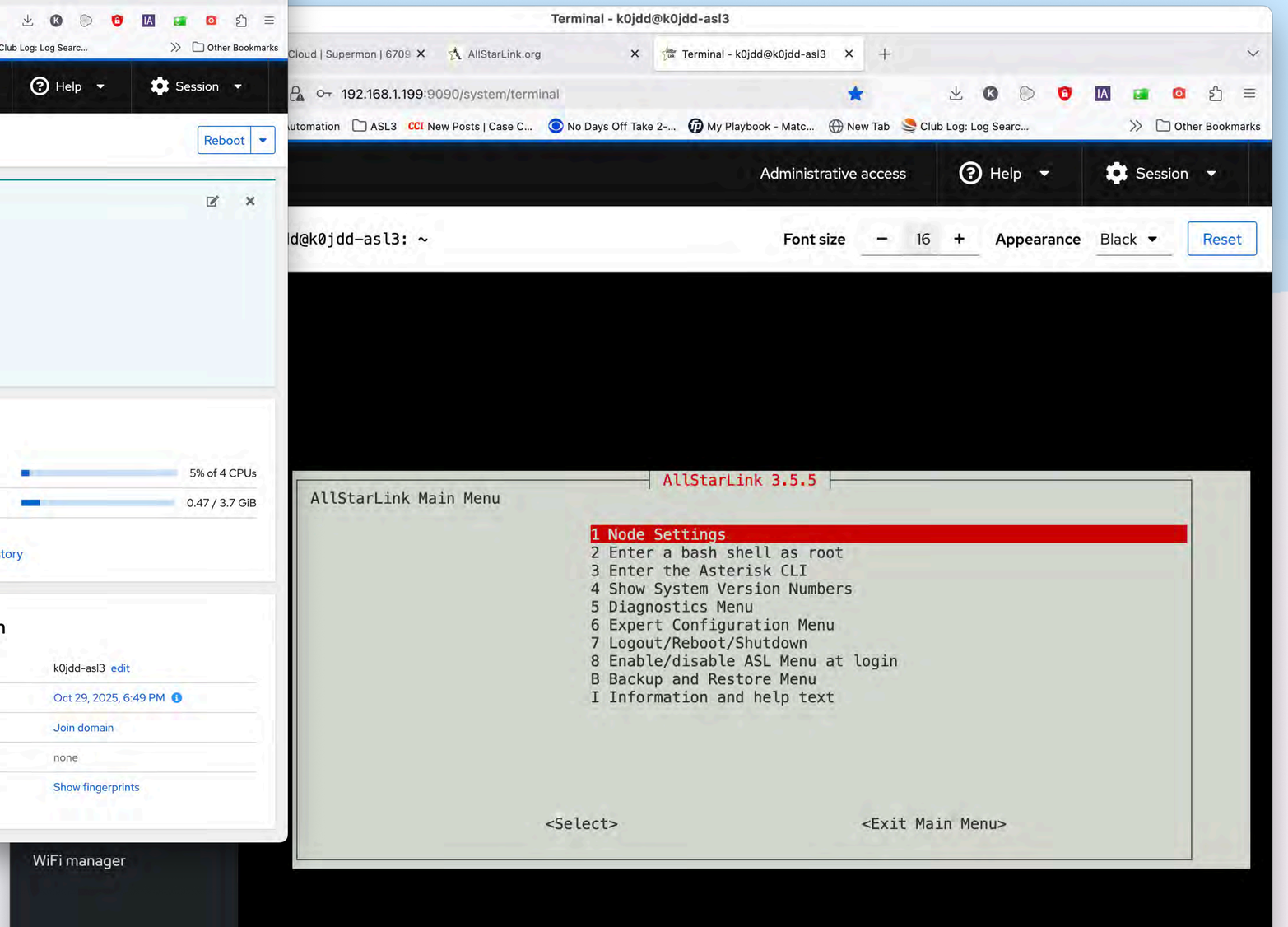

A Brief Word about *SuperMon*

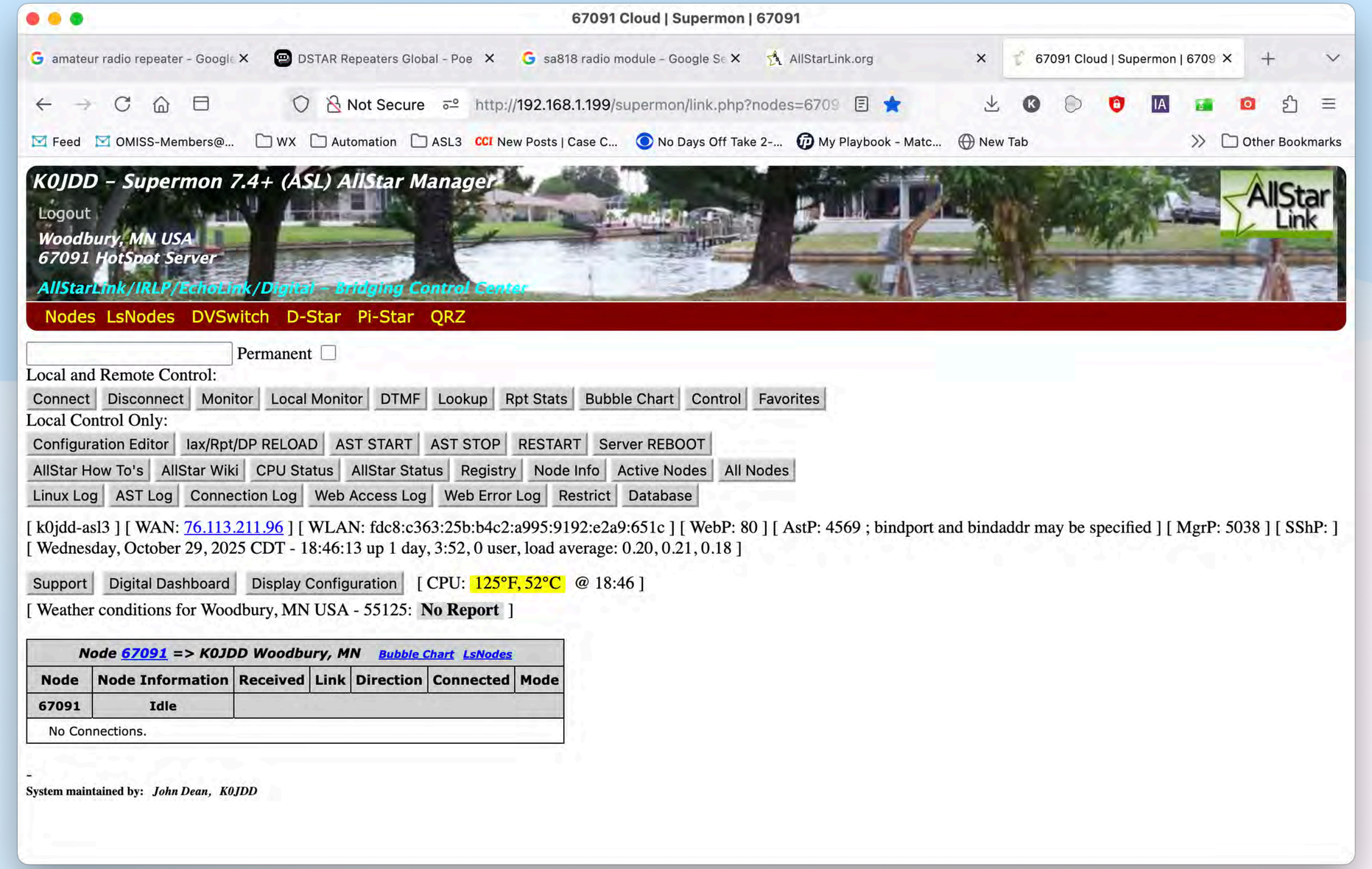

Resources

- www.allstarlink.org
  - Here you can register a new node, find “getting started” documents, download software images, and engage with a vibrant community willing to answer questions
- www.youtube.com
  - There is probably a video here that answers your question, *if look for it…*
- www.google.com
  - *Type a question, get an answer*

Hardware Resources

- Raspberry Pi hardware
  - www.digikey.com
  - www.amazon.com
  - www.canakit.com
  - www.adafruit.com
- Hotspot hardware
  - www.kits4hams.com
  - www.node-ventures.com/buy-clearnode/
  - www.hotspotradios.com/hotspotradio